Billboard Structures

Valuation Guide

Based on the experience gained with the implementation of the first Billboard Structures Valuation Guide, we have made revisions to the current guide to reflect the changes in costs associated with the construction of billboards. We feel this guide will simplify the valuation process used by the local taxing jurisdictions and enhance the uniformity and accuracy in the valuation of outdoor advertising for mass appraisal purposes. In this guide, the base cost has already been determined with the additional improvements included in the square foot base cost. This cost per square foot has been extended out to a total value for each specific class with the billboard structure categorized by type of construction, size, and height above ground level. In addition, a current depreciation schedule has been provided at the back of the guide. The appraiser will locate the type and size of each billboard, make any necessary construction adjustments, and then apply the appropriate depreciation to come up with the billboard value for assessment purposes.

The methodology is based on current data and is not applicable to prior years. Counties adopting these schedules should also consider this as a guide for the mass appraisal of billboards, understanding that it will not cover every possible sign type and configuration. The appraiser may need to make additional adjustments for location, conditions, and other structures not covered by these schedules.

The values provided in the classification tables include the cost conversion factor, derived from data made available in the Producer Price Indexes prepared by the Bureau of Labor Statistics. This factor will take into consideration any changes in the cost to construct billboards.

Introduction to Billboards

An outdoor advertising sign in the form of a billboard consists of at least one display panel and the supporting framework. Billboards may be freestanding, mounted to buildings, or attached to other structures. Modern billboards conform to engineering standards and are constructed of steel, while older billboard structures are made of wood or angle iron frames. A billboard may be smaller than the permitted size. This allows for the addition of a cutout or extension within the square foot envelope of the permitted area. Billboards vary in display position and size, but the industry standard display faces include:

6 ft. x 12 ft. = 72 square feet
8 ft. x 12 ft. = 96 square feet
10 ft. x 22 ft. = 220 square feet
10 ft. x 24 ft. = 240 square feet
12 ft. x 25 ft. = 300 square feet
10.5 ft. x 36 ft. = 378 square feet
12 ft. x 40 ft. = 480 square feet
14 ft. x 48 ft. = 672 square feet
16 ft. x 60 ft. = 960 square feet
20 ft. x 50 ft. = 1,000 square feet

The typical arrangements of display faces include: single face, double face, V-built, side-by-side, stacked, and tri-build configurations.

For assessment purposes, billboards are grouped into four structural categories based on the building materials used and the underlying support system. The four categories, or classifications, include: wood, steel frame, multi-mast steel, and monopole.

CLASS 1 WOOD STRUCTURE

This class of billboards is constructed with wood posts or pole supports with dimensional lumber as the secondary support (A-frame) with a wood or metal catwalk and a single display panel. Supports may be imbedded in the ground. There may be a foundation of concrete or gravel. Lighting, if present, is either fluorescent or mercury vapor.

ILLUSTRATION OF WOOD STRUCTURE

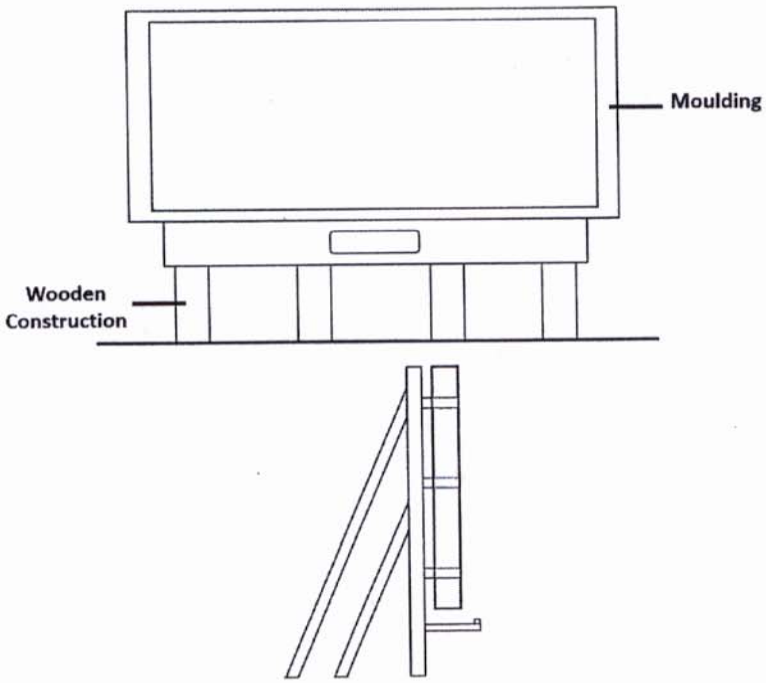

WOOD SINGLE FACE

WOOD V-BUILT

1. STRUCTURE - Wood support poles or posts.

2. FOUNDATION - Embedded in ground or equivalent.

3. PLATFORM OR CATWALK -Included in Base.

4. PANELS - Included in Base.

5. APRON - Included in Base.

6. LIGHTING - Included in Base.

7. ADDITIONAL PANELS - None.

TOTAL BASE COST PER STRUCTURE

1A- SINGLE FACE WOOD A FRAME

Size	0-20' HAGL	21-30' HAGL	31-40' HAGL	41-55' HAGL	56-80' HAGL	80+' HAGL
300'	$ 7,170	$ 7,960	$ 9,540	$ 10,400		
378'	$ 8,400	$ 9,350	$ 11,250	$ 12,090		
480'	$ 9,930	$ 11,680	$ 15,180	$ 15,790		
672'	$ 13,410	$ 15,790	$ 20,580	$ 21,340		

1B- DOUBLE FACE WOOD A FRAME

Size	0-20' HAGL	21-30' HAGL	31-40' HAGL	41-55' HAGL	56-80' HAGL	80+' HAGL
300'	$ 9,350	$ 10,400	$ 12,510	$ 13,480		
378'	$ 10,870	$ 12,090	$ 14,530	$ 15,680		
480'	$ 13,360	$ 15,680	$ 20,370	$ 21,230		
672'	$ 18,140	$ 21,340	$ 27,700	$ 28,760		

1C- V BUILT AND SIDE BY SIDE WOOD A FRAME

Size	0-20' HAGL	21-30' HAGL	31-40' HAGL	41-55' HAGL	56-80' HAGL	80+' HAGL
300'	$ 14,320	$ 15,910	$ 19,110	$ 20,690		
378'	$ 16,810	$ 18,660	$ 22,380	$ 24,310		
480'	$ 19,840	$ 23,340	$ 30,360	$ 31,520		
672'	$ 26,910	$ 31,620	$ 41,070	$ 42,660		

CONSTRUCTION ADJUSTMENTS

See worksheet for construction adjustments

This class of billboards is constructed with angle iron or steel supports with catwalk, and a single display panel. Supports may be imbedded in the ground. There may be a foundation of concrete or gravel. Lighting, if present, is either fluorescent or mercury vapor.

ILLUSTRATION OF STEEL A-FRAME CONSTRUCTION

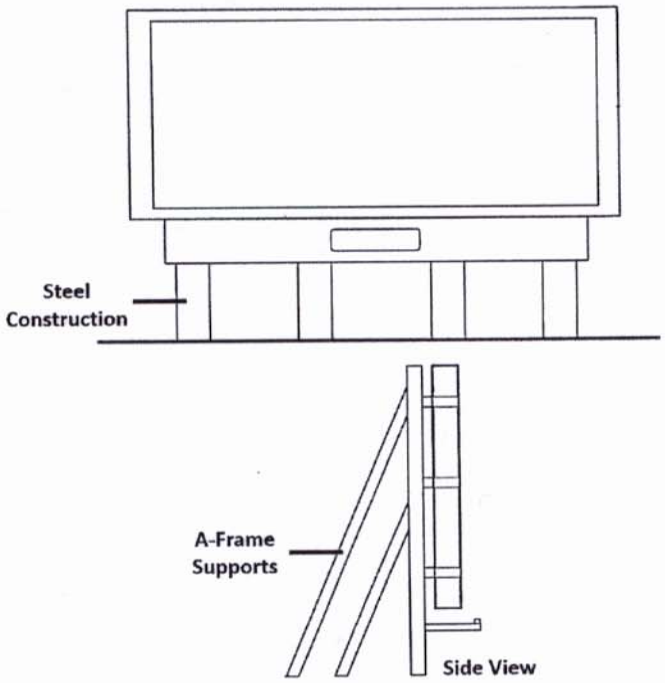

STEEL A-FRAME DOUBLE FACE

STEEL A-FRAME V-BUILT

1. STRUCTURE - Steel pole, angle iron, I beam or equivalent as primary support.

2. FOUNDATION - Concrete gravel or equivalent.

3. PLATFORM OR CATWALK -Included in Base.

4. PANELS - Included in Base.

5. APRON - Included in Base.

6. LIGHTING - Included in Base.

7. ADDITIONAL PANELS - None.

TOTAL BASE COST PER STRUCTURE

2A- SINGLE FACE A FRAME STEEL

Size	0-20' HAGL	21-30' HAGL	31-40' HAGL	41-55' HAGL	56-80' HAGL	80+' HAGL
300'	$ 18,440	$ 20,490	$ 24,400			
378'	$ 19,280	$ 22,680	$ 29,070			

2B- DOUBLE FACE A FRAME STEEL

Size	0-20' HAGL	21-30' HAGL	31-40' HAGL	41-55' HAGL	56-80' HAGL	80+' HAGL
300'	$ 24,870	$ 27,640	$ 32,910			
378'	$ 27,080	$ 31,870	$ 40,850			

2C- V BUILT A FRAME STEEL

Size	0-20' HAGL	21-30' HAGL	31-40' HAGL	41-55' HAGL	56-80' HAGL	80+' HAGL
300'	$ 36,820	$ 40,910	$ 48,710			
378'	$ 38,540	$ 45,360	$ 58,150			

CONSTRUCTION ADJUSTMENTS

See worksheet for construction adjustments

This class of billboards is constructed with steel poles, I beam or equivalent as primary support, with a catwalk, and a single display panel. Lighting is fluorescent or mercury vapor.

ILLUSTRATION OF MULTI-MAST STRUCTURE

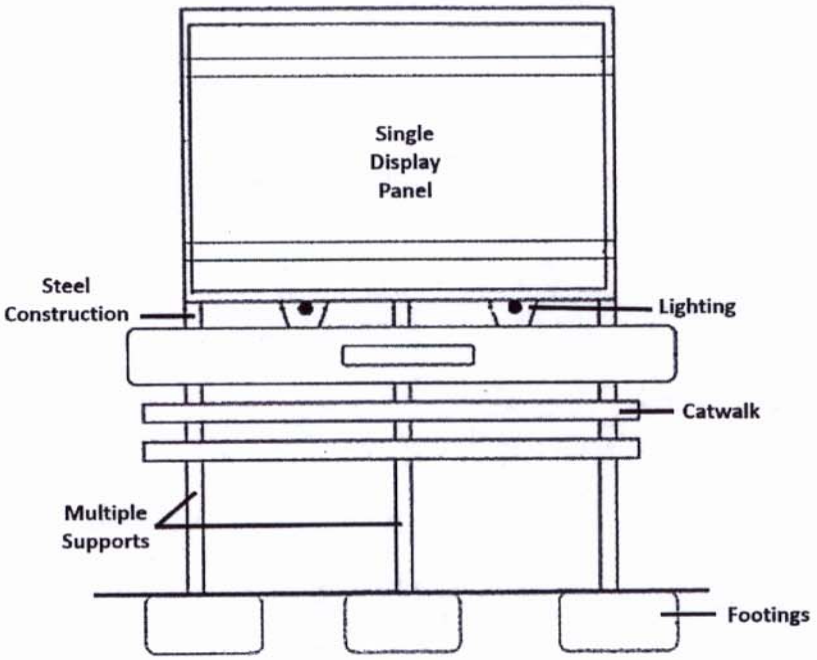

STEEL MULTI-MAST DOUBLE FACE STACKED DISPLAYS

STEEL MULTI-MAST DOUBLE FACE

1. STRUCTURE - Steel pole, angle iron, I beam or equivalent as primary support.

2. FOUNDATION - Concrete gravel or equivalent.

3. PLATFORM OR CATWALK -Included in Base.

4. PANELS - Included in Base.

5. APRON - Included in Base.

6. LIGHTING - Included in Base.

7. ADDITIONAL PANELS - None.

TOTAL BASE COST PER STRUCTURE

3A- SINGLE FACE MULTI MAST STEEL

Size	0-20' HAGL	21-30' HAGL	31-40' HAGL	41-55' HAGL	56-80' HAGL	80+' HAGL
300'	$ 21,960	$ 24,400	$ 29,050			
378'	$ 26,150	$ 29,070	$ 34,610			
480'	$ 30,380	$ 33,730	$ 40,170			
672'	$ 36,080	$ 40,110	$ 47,750			

3B- DOUBLE FACE MULTI MAST STEEL

Size	0-20' HAGL	21-30' HAGL	31-40' HAGL	41-55' HAGL	56-80' HAGL	80+' HAGL
300'	$ 29,680	$ 32,980	$ 39,270	$ 46,750		
378'	$ 35,700	$ 39,670	$ 47,220	$ 56,210		
480'	$ 40,440	$ 44,920	$ 53,480	$ 63,670		
672'	$ 47,480	$ 52,760	$ 62,810	$ 74,790		

3C- V BUILT MULTI MAST STEEL

Size	0-20' HAGL	21-30' HAGL	31-40' HAGL	41-55' HAGL	56-80' HAGL	80+' HAGL
300'	$ 35,700	$ 39,670	$ 47,220	$ 56,210		
378'	$ 43,960	$ 48,860	$ 58,150	$ 69,220		
480'	$ 49,900	$ 55,440	$ 65,990	$ 78,590		
672'	$ 59,370	$ 65,940	$ 78,520	$ 93,460		

CONSTRUCTION ADJUSTMENTS

See worksheet for construction adjustments

This class of billboards is constructed with tubular steel support (or various circumferences), tubular steel framing, metal catwalk and a single display panel. The foundation is concrete. Lighting is fluorescent or mercury vapor.

ILLUSTRATION OF MONOPOLE

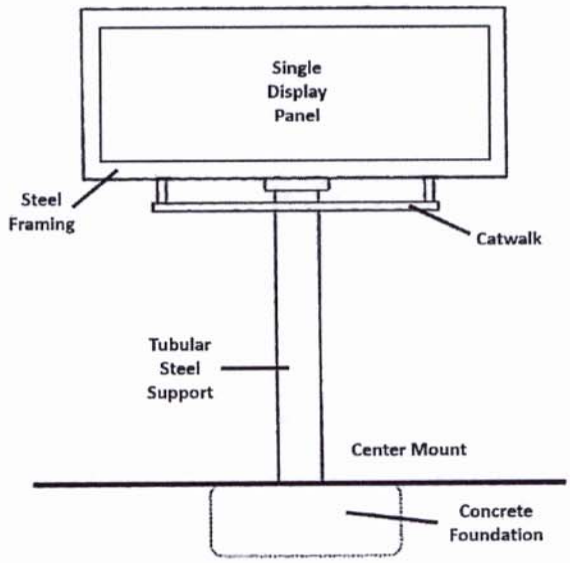

ILLUSTRATION OF MONOPOLE

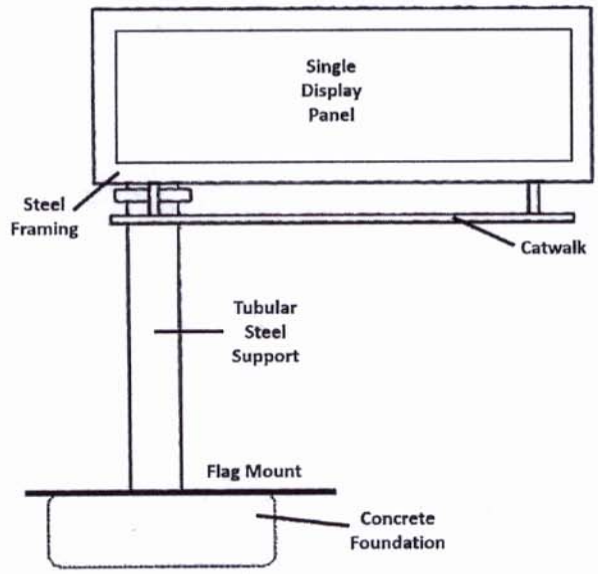

DISPLAY CONFIGURATIONS

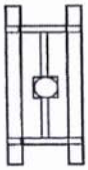

Double Face

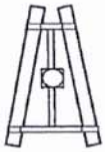

V Face

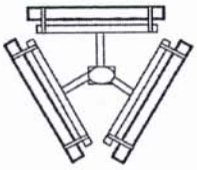

Tri-sided

FLAG MONOPOLE DOUBLE FACE

CENTER MONOPOLE DOUBLE FACE

CENTER MONOPOLE V FACE

CENTER MONOPOLE TRI-SIDED

1. STRUCTURE - Tubular Steel Supports.

2. FOUNDATION - Poured concrete.

3. PLATFORM OR CATWALK -Included in Base.

4. PANELS - Included in Base.

5. APRON - Included in Base.

6. LIGHTING - Included in Base.

7. ADDITIONAL PANELS - None.

TOTAL BASE COST PER STRUCTURE

4A- SINGLE POLE SINGLE FACE CENTER MOUNTED MONOPOLE

Size	0-20' HAGL	21-30' HAGL	31-40' HAGL	41-55' HAGL	56-80' HAGL	80+' HAGL
300'	$ 23,930	$ 26,420	$ 31,420	$ 36,390	$ 46,370	$ -
378'	$ 25,090	$ 29,280	$ 37,680	$ 46,050	$ 62,810	$ -
480'	$ 36,680	$ 40,440	$ 47,960	$ 55,490	$ 70,670	$ -
672'	$ 48,880	$ 52,730	$ 60,490	$ 68,230	$ 83,820	$ 97,620
960'	$ 58,520	$ 62,400	$ 70,140	$ 77,880	$ 93,470	$ 114,810
1000'	$ 64,670	$ 68,540	$ 76,290	$ 84,030	$ 99,640	$ 120,950

4B- SINGLE POLE SINGLE FACE PARTIAL FLAG MONOPOLE

Size	0-20' HAGL	21-30' HAGL	31-40' HAGL	41-55' HAGL	56-80' HAGL	80+' HAGL
300'	$ 24,880	$ 27,490	$ 32,670	$ 37,890	$ 48,180	$ -
378'	$ 26,210	$ 30,570	$ 39,270	$ 47,960	$ 65,370	$ -
480'	$ 38,100	$ 42,030	$ 49,880	$ 57,720	$ 73,520	$ -
672'	$ 50,540	$ 54,660	$ 62,810	$ 70,980	$ 87,230	$ 101,440
960'	$ 60,640	$ 64,720	$ 72,910	$ 81,050	$ 97,310	$ 119,460
1000'	$ 67,010	$ 71,090	$ 79,250	$ 87,430	$ 103,570	$ 125,850

4C- SINGLE POLE SINGLE FACE FULL FLAG MONOPOLE

Size	0-20' HAGL	21-30' HAGL	31-40' HAGL	41-55' HAGL	56-80' HAGL	80+' HAGL
300'	$ 37,310	$ 39,130	$ 45,620	$ -	$ -	$ -
378'	$ 39,320	$ 43,510	$ 51,890	$ 60,280	$ 77,030	$ -
480'	$ 53,650	$ 56,970	$ 63,670	$ 70,350	$ 83,920	$ -
672'	$ 57,830	$ 61,760	$ 69,600	$ 77,450	$ 93,080	$ 107,710
960'	$ 67,650	$ 71,530	$ 79,250	$ 87,000	$ 102,620	$ 125,000
1000'	$ 75,070	$ 78,840	$ 86,370	$ 93,910	$ 108,770	$ 132,220

CONSTRUCTION ADJUSTMENTS

See worksheet for construction adjustments

1. STRUCTURE - Tubular Steel Supports.

2. FOUNDATION - Poured concrete.

3. PLATFORM OR CATWALK -Included in Base.

4. PANELS - Included in Base.

5. APRON - Included in Base.

6. LIGHTING - Included in Base.

7. ADDITIONAL PANELS -None.

TOTAL BASE COST PER STRUCTURE

4D- SINGLE POLE DOUBLE & V FACE CENTER MOUNTED MONOPOLE

Size	0-20' HAGL	21-30' HAGL	31-40' HAGL	41-55' HAGL	56-80' HAGL	80+' HAGL
300'	$ 34,990	$ 36,950	$ 40,850	$ -	$ -	$ -
378'	$ 38,100	$ 40,210	$ 44,450	$ 48,710	$ 57,310	$ -
480'	$ 44,260	$ 48,070	$ 55,720	$ 63,350	$ 78,520	$ -
672'	$ 53,100	$ 57,210	$ 65,370	$ 73,520	$ 89,960	$ 108,220
960'	$ 62,010	$ 66,430	$ 75,230	$ 84,030	$ 101,660	$ 125,000
1000'	$ 68,070	$ 72,480	$ 81,270	$ 90,090	$ 107,710	$ 131,150

4E- SINGLE POLE DOUBLE & V FACE PARTIAL FLAG MONOPOLE

Size	0-20' HAGL	21-30' HAGL	31-40' HAGL	41-55' HAGL	56-80' HAGL	80+' HAGL
300'	$ 36,310	$ 38,350	$ 42,430	$ -	$ -	$ -
378'	$ 39,580	$ 41,810	$ 46,260	$ 50,720	$ 59,630	$ -
480'	$ 45,990	$ 49,990	$ 57,930	$ 65,880	$ 81,720	$ -
672'	$ 55,010	$ 59,330	$ 67,920	$ 76,490	$ 93,580	$ 129,340
960'	$ 64,510	$ 69,070	$ 78,200	$ 87,330	$ 105,690	$ 149,520
1000'	$ 70,870	$ 75,430	$ 84,570	$ 93,680	$ 112,050	$ 156,720

4F- SINGLE POLE DOUBLE & V FACE FULL FLAG MONOPOLE

Size	0-20' HAGL	21-30' HAGL	31-40' HAGL	41-55' HAGL	56-80' HAGL	80+' HAGL
300'	$ 49,120	$ 51,020	$ 54,800	$ -	$ -	$ -
378'	$ 53,530	$ 55,600	$ 59,740	$ 63,880	$ 72,250	$ -
480'	$ 53,890	$ 58,470	$ 67,590	$ 76,720	$ 95,090	$ -
672'	$ 58,740	$ 63,670	$ 73,520	$ 83,400	$ 103,250	$ 118,310
960'	$ 72,370	$ 76,720	$ 85,410	$ 94,130	$ 111,830	$ 137,320
1000'	$ 77,780	$ 82,340	$ 91,450	$ 100,580	$ 118,950	$ 144,410

CONSTRUCTION ADJUSTMENTS

See worksheet for construction adjustments

1. STRUCTURE - Tubular Steel Supports.

2. FOUNDATION - Poured concrete.

3. PLATFORM OR CATWALK -Included in Base.

4. PANELS - Included in Base.

5. APRON - Included in Base.

6. LIGHTING - Included in Base.

7. ADDITIONAL PANELS - None.

TOTAL BASE COST PER STRUCTURE

4G- TRI-SIDED CENTER MOUNTED

Size	21-30' HAGL	31-40' HAGL	41-55' HAGL	56-80' HAGL	80+' HAGL
300'					
378'					
480'					
672'		$ 111,830	$ -	$ 144,410	$ 204,250
960'					
1000'					

4H- TRI-SIDED STACKED CENTER MOUNTED

Size	21-30' HAGL	31-40' HAGL	41-55' HAGL	56-80' HAGL	80+' HAGL
300'					
378'					
480'					
672'		$ 104,530			
960'					
1000'					

CONSTRUCTION ADJUSTMENTS

See worksheet for construction adjustments

3	2016	88	94
4	2015	84	92
5	2014	80	90
6	2013	76	88
7	2012	72	86
8	2011	68	84
9	2010	64	82
10	2009	60	80
11	2008	56	78
12	2007	52	76
13	2006	48	74
14	2005	44	72
15	2004	40	70
16	2003	36	68
17	2002	35	66
18	2001	35	64
19	2000	35	62
20	1999	35	60
21	1998	35	58
22	1997	35	56
23	1996	35	54
24	1995	35	52
25	1994	35	50
26	1993	35	48
27	1992	35	46
28	1991	35	44
29	1990	35	42
30	1989	35	40
31	1988	35	38
32	1987	35	36
33	1986	35	35
34	1985	35	35
35	1984	35	35
36	1983	35	35
37	1982	35	35
38	1981	35	35
39	1980	35	35
40	1979	35	35
41	1978	35	35
42	1977	35	35
43	1976	35	35
44	1975	35	35
45	1974	35	35
46	1973	35	35
47	1972	35	35
48	1971	35	35
49	1970	35	35
50	1969	35	35

PERSONAL PROPERTY
COMPOSITE FACTORS
October 1, 2018

YEAR	3 YR COMP. FACTOR	5 YR COMP. FACTOR	8 YR COMP. FACTOR	10 YR COMP. FACTOR	12 YR COMP. FACTOR	15 YR COMP. FACTOR	20 YR COMP. FACTOR	25 YR COMP. FACTOR
2018	84	93	95	96	97	98	99	99
2017	67	88	93	95	96	97	98	98
2016	44	72	83	88	91	95	96	97
2015	30	55	71	81	85	90	95	96
2014	20	36	57	71	77	84	91	95
2013	18	25	46	63	71	79	89	94
2012	16	22	36	54	64	75	86	92
2011	14	20	29	44	56	69	83	91
2010	12	19	26	35	50	64	81	90
2009	10	17	24	28	42	57	76	88
2008		16	23	26	35	52	71	82
2007				24	30	46	68	81
2006					28	40	65	79
2005					27	35	60	77
2004					25	32	55	74
2003						29	49	71
2002						28	44	67
2001							39	62
2000							36	57
1999							33	51
1998								46
1997								41
1996								37
1995								35

The above table reflects the current Composite Factors to be used in the calculation of Personal Property for property tax purposes.

These Composite Factors should not be indexed.

Salvage or scrap value should be calculated by using 50% of the lowest composite factor in the appropriate economic life category.